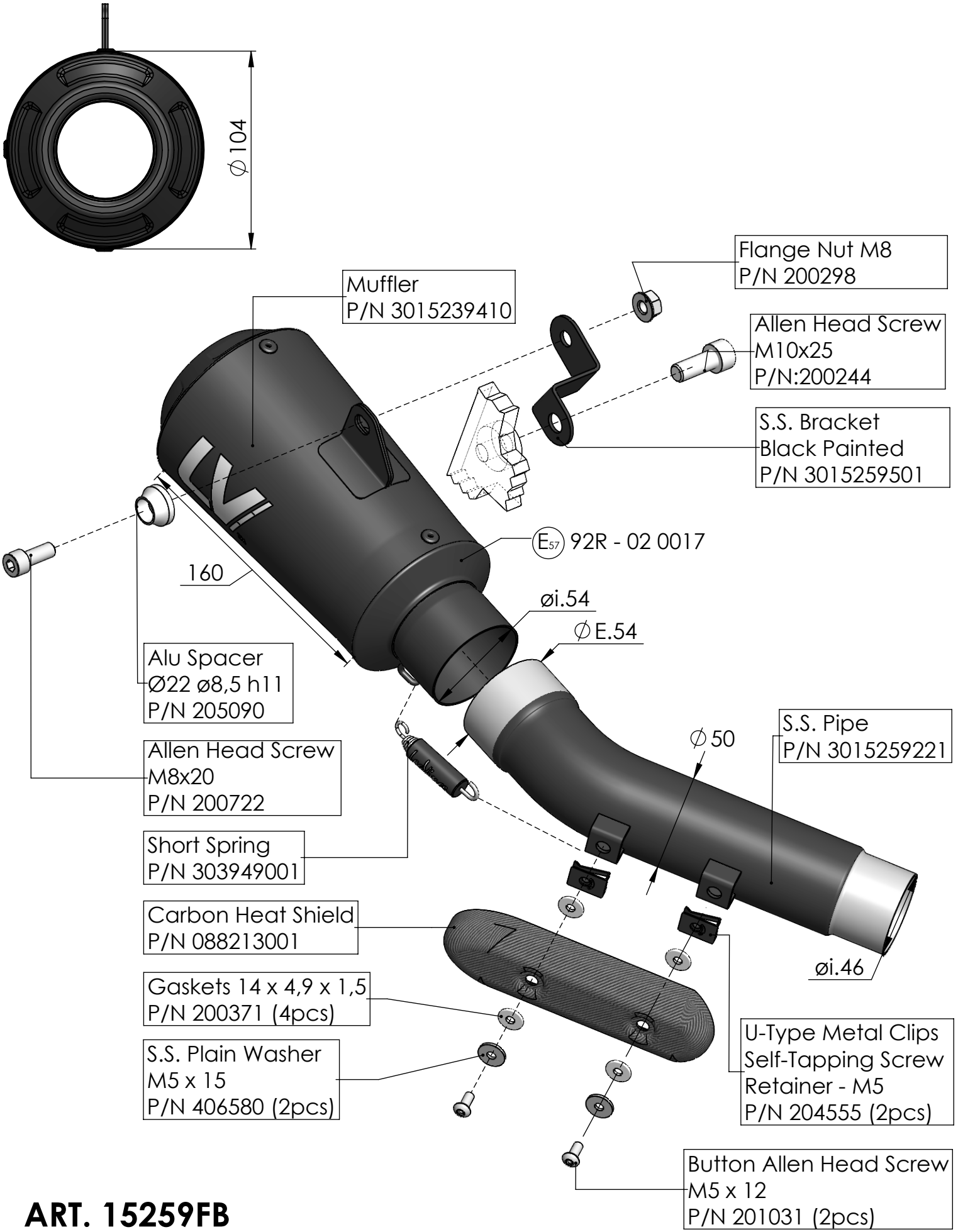

ART. 15259FB

BENELLI - 752S

SLIP-ON - LV10 - FULL BLACK - APPROVED